PRIORIT
Fire | Resistant | Components

Montage- og driftsvejledning

PRIODOOR ETX-RDA-H

Røgklap for

røgsikrings-trykanlæg

Skaktside åbnende

Stand: 04/2018
EP.A.10678-1

Kære kunde,

Du har besluttet dig for et højkvalitets PRIORIT-produkt.

Mange tak.

For at vi ka sikre dig en perfekt funktion af det samlede system, bedes du observere den følgende driftsvejledning grundigt.

Ved manglende observering kan vi ikke påtage os hæftelse.

Tekniske ændringer, der tjener til forbedring af vores produkter, eller som er påkrævet ved lovmæssige ændringer, forbeholdes udtrykkeligt - også uden varsel.

Denne drifts- og montagevejledning - også i uddrag - må kun trykkes og kopieres med skriftlig tilladelse fra PRIORIT AG.

PRIORIT AG, Rodenbacher Chaussee 6, 63457 Hanau

Tlf: 06181 3640-0, Fax: 06181 3640-210,

E-Mail : info@priorit.de , www.priorit.de

Indholdsfortegnelse

Vigtige anvisninger 4
Generelle sikkerhedstekniske anvisninger 5
Tilsigtet anvendelse 5
Funktionsprøvning, sikkerhedsteknisk kontrol, ... 5
pleje og vedligeholdelse 5
Garanti, overdragelseserklæring 6
Rettigheder 6
Samling af montageramme 7
Montering af montageramme 7
Montage af røgklap 9
Indbygningsdetalje ETX-RDA-H i PRIOWALL 10
Indbygningsdetalje PRIOWALL på massiv væg 10
Nødåbning af røgklap 11
Skift af gasfjeder 11
Teknisk information for kædedrev 13
Tekniske data kædedrev og sikkerhedsanvisninger 14-57
Anbefalede inspektioner 58

Vigtige anvisninger

Produktet skal ubetinget opstilles og monteres lod- og vandret!

Ved montage er det ubetinget påkrævet at benytte krydslaser.

Ved afsætning af enkeltdele, må dette ikke ske på kanter, og opbevaringsstedet skal forud beskyttes med blødt underlag, f.eks. med tæppe!

Må kun monteres af fagpersonale!

Fastspændingsskruer for kædedrev på forsiden af klappen må under ingen omstændigheder løsnes!

Der er fare for nedstyrtning af klap

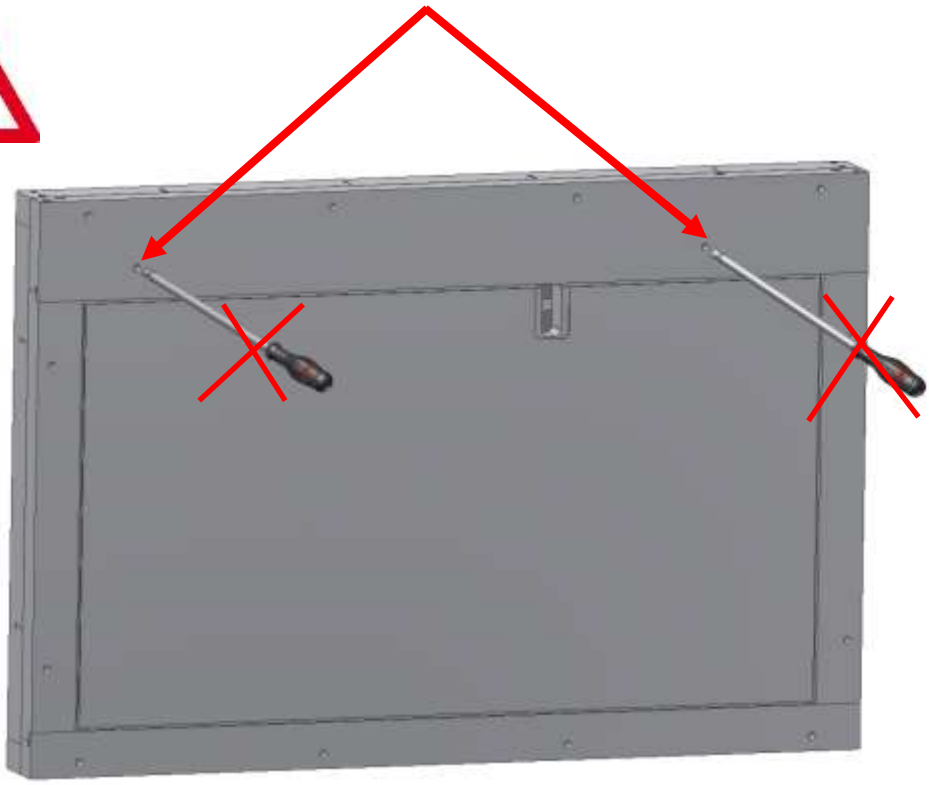

Generelle sikkerhedstekniske anvisninger

- Drifts- og montagevejledning skal altid opbevares på produktets anvendelsessted.
- Foreskrevne sikkerhedsanvisninger skal anbringes på et for operatøren synligt sted.
- Alle sikkerheds.- og fareanvisninger samt typeskilt skal holdes i læsbar stand.
- Benyt kun produktet i korrekt tilstand.
- Observer de tekniske angivelser i vores katalog hhv. datablad for respektive produkt.
- En ukorrekt installation kan påvirke den beskyttende funktion.
- Observer alle anvisninger i denne drifts- og montagevejledning.
- Låsesystemer må ikke forandres eller udskiftes.
- Må kun monteres af fagpersonale.

Tilsigtet anvendelse

- De i denne drifts- og montagevejledning beskrevne produkter er konstrueret efter aktuelle tekniske stand og anerkendte sikkerhedstekniske regler.
- De må kun:
  - benyttes til det tilsigtede formål og
  - benyttes i teknisk perfekt stand
- Enhver anden anvendelse anses som ikke tilsigtet.

  For de deraf følgende skader og følgeskader påtager PRIORIT sig intet ansvar.

Funktionsprøvning, sikkerhedsteknisk kontrol, pleje og vedligeholdelse

- Kædedrevsfunktion kontrolleres for funktion 2 x årligt.
- Visuel prøvning af dørplade og karm for mekaniske skader, evt. skadede dele udskiftes.
- Visuel kontrol for korrossionsskader, evt. udskiftning af berørte komponenter.
- Visuel kontrol af dørplade, karm, gasfjeder og beslag for smuds, evt. rengøres.
- Visuel kontrol af røg- og brandsikringspakninger for skader og fuldstændighed, evt. udskiftes pakninger.
- For ydre rengøring af produktet kan der benyttes mildt husholdnings-rengøringsmiddel (kun ved kunststofbelagte røgklapper).
- Produktet skal beskyttes mod vand, indtrængende fugt eller stænk.
- Hvis der registreres sikkerhedsteknisk relevante skader, skal disse udbedres med originale dele inden videre anvendelse.

- 2 x årligt gennemføres en komplet cyklusprøvning.

Garanti, overdragelseserklæring

For at sikre en optimal funktion af vores produkter, skal montageanvisninger ubetinget overholdes.

Garantien fra PRIORIT omfatter de leverede produkter.

Konstruktive ændringer må kun udføres efter aftale med PRIORIT, da garantidækningen i modsat fald bortfalder.

Garanti for montageydelser er pålagt montør/opstiller.

Garanti- og hæftelseskrav ved person- og tingskader er udelukket, hvis de kan føres tilbage til en eller flere af de følgende årsager:

- Produktet anvendes ikke som tilsigtet
- Ukorrekt montage, idriftsættelse, betjening og vedligeholdelse.
- Manglende observering af anvisninger for transport, opbevaring, drift og montage.
- Egenhændige konstruktive ændringer på produktet.
- Ukorrekte reparationer.
- Katastrofepåvirkninger ved fremmed påvirkning af tredjepart og højere magter.

Rettigheder

For sikring af innovation og konstruktion er der indgivet patentanmeldelse ved tysk patentkontor.

Samling af montageramme

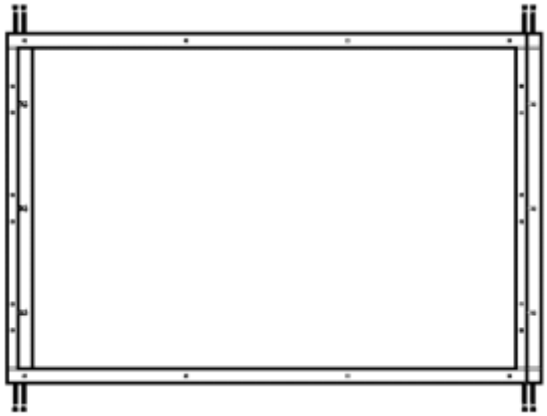

- Lodrette og tværgående rammedele monteres med forsænkede bolte 4,5 x 80 mm.

Montering af montageramme

- Bemærk skaktarbejde: **Beskyt dig selv og dit værktøj mod fald!**
- Montagerammen anbringes i vægåbningen.
- Justeres lod- og vandret.
- Omløbende åbningsmellemrum justeres ensartet.
- Boltpunkter underlægges ikke brandbart materiale. (Medfølger ikke ved levering)
- Underlagsmaterialet skal nederst dække udover fladen, det tjener senere til afsætningsflade for fløjelementet.
- Lodret karm anbringes.
- Sikres mod fald!

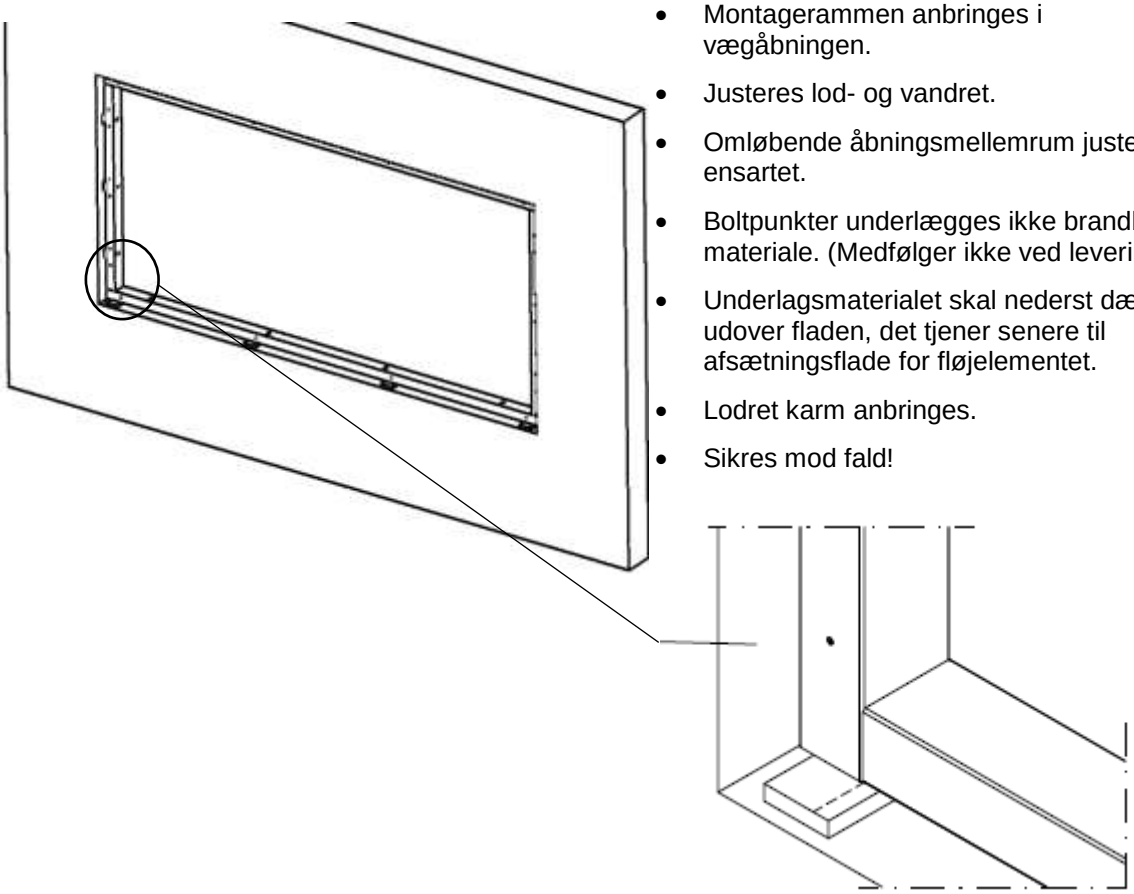

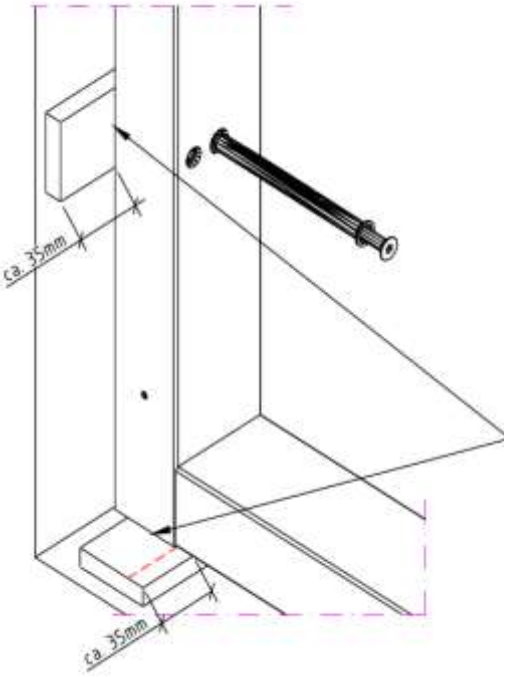

- Fastgøres i massiv væg med 8 x 120 dybel.
- Boltpunkter fastlægges.
- Lodret karm anbringes.
- Hulrum mellem montageramme og vægåbning fyldes med gips.

Underlagsmateriale

- Indbygning af karm og dørelement skal altid ske **lod- og vandret.** Hertil skal der ubetinget benyttes krydslaser.

Montage af røgklap

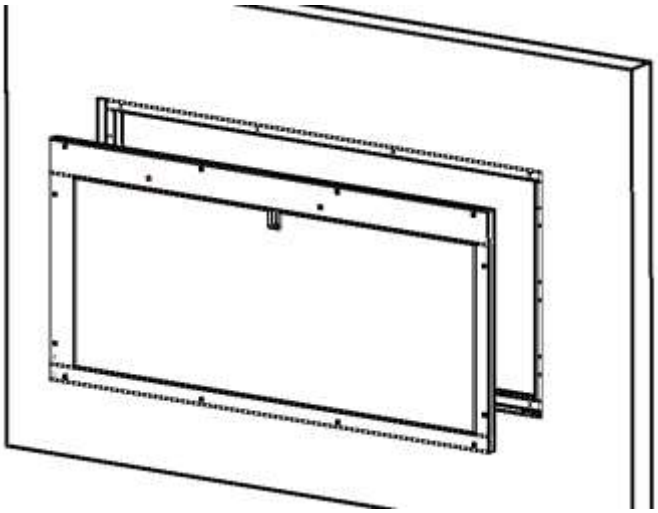

- Dørelement drejes til indbygningsposition og anbringes foran vægåbning.
- Kablet på låsesiden føres fremad og efterlades hængende.
- Dørelementet løftes i vægåbning og anbringes på udstående underlagsmateriale.
- Dørelementet justeres plan med montagerammen, og sikres mod fald og væltning.
- Karme på dørelementet monteres på montageramme med forsænkede bolte 4,5 x 80 mm.
- Efter boltning af karm med montageramme, kan klappen åbnes.
- Hertil kræves en netdel med 24V eller en tester. Kabel brun +24V, Kabel blå -24V.
- Efter udført funktionsprøvning lægges kabel mellem montageramme ogvæg i skakten (se detaljer herunder).
- Vægfuger fuges med mørtel eller gips, afhængig af vægtypen (F.eks. Knauf Uniflott).

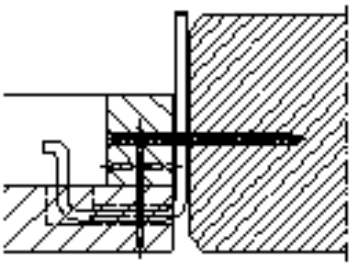

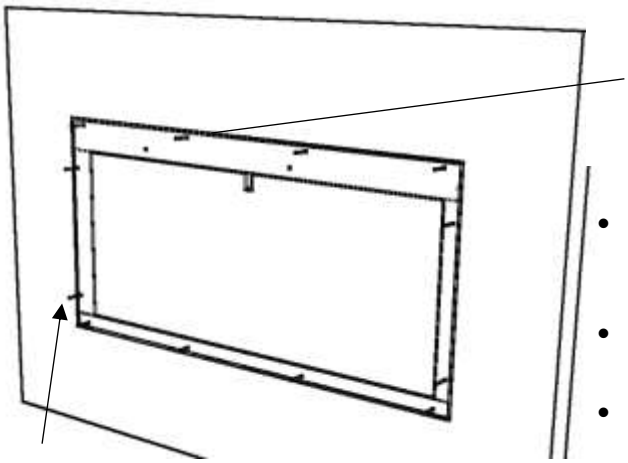

- Boringer mellem montageramme og væg, i højde med udgangsposition for tilslutningskanbel, oprettes.
- Vær opmærksom på, at tilslutningskabel ikke skades ved boring.
- Tilslutningskabel føres gennem boring i skakten.

Forsænket bolt 12 stk.

4,5 x 80

Indbygningsdetalje ETX-RDA-H i PRIOWALL

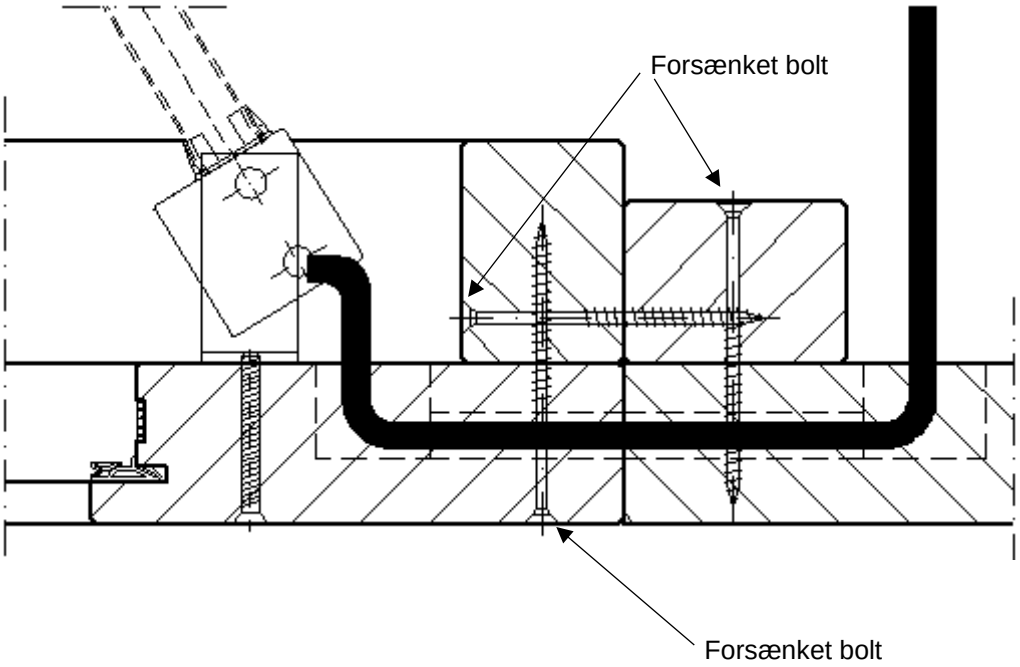

Indbygningsdetalje PRIOWALL på massiv væg

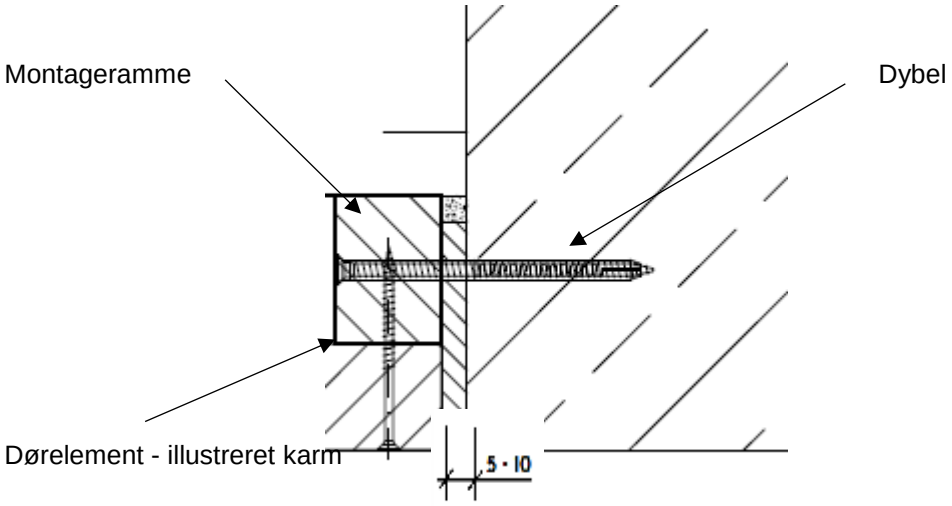

Nødåbning af røgklap

Nødåbningaf røgklap må udelukkende ske med revisionsværktøj fra PRIORIT AG (art. nr. RT-RDA-H). Enhver anden anvendelse anses som ikke tilsigtet. For de deraf følgende skader og følgeskader påtager PRIORIT sig intet ansvar.

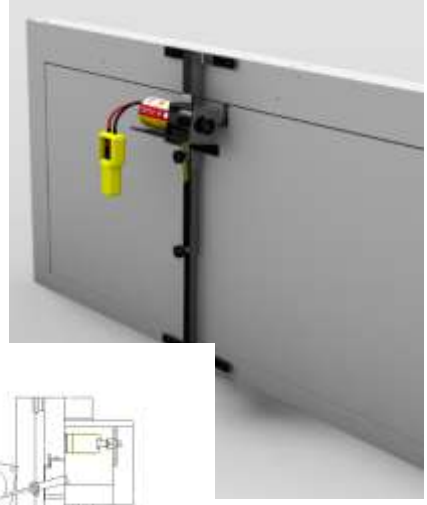

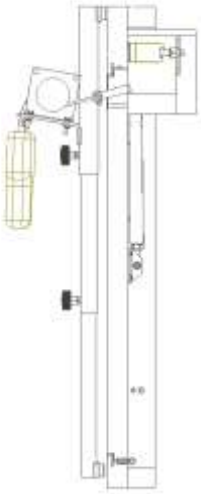

- Elementhøjde måles og revisionsværktøj indstilles efter mål.
- Strømkilde (12 V) tilsluttes revisionsværktøj.
- Kabel køres ca. 10 cm ud med betjeningselement.
- Revisionsværktøj holdes foran RDA-H i området ved kædeføring.
- T-stykke indføres i kædeføring og drejes 90° og holdes i position.
- Med betjeningselement køres kabel ind igen, til revisionsværktøj trykker på RDA-H med alle fire kunststoffødder og T-stykke er fastholdt. Vær venligst opmærksom på, at fødder hviler på karme eller på massiv væg og ikke på klap!
- Nu kan begge bolte for montering af bøjleholder på kædedrev boltes ud.
- Plade køres op med betjeningselement. Tryk evt. let med hånden i retning af skakten.
- Istandsættelse, vedligeholdelse eller udskiftning af kædedrev, udføres efter behov.
- Kædedrev køres ud, bøjleholder samt fløj bringes i boltposition.
- Bøjleholder boltes igen på karm og der udføres funktionsprøvning.
- Kæde forbindes med fløjbuk.
- Når kædedrev er korrekt forbundet med klap gennem fløjbuk og over bøjleholder med karm, kan revisionsværktøjet fjernes igen.
- Kabelbinder for fastgørelse af stikforbindelse på kædedrev anbringes igen.

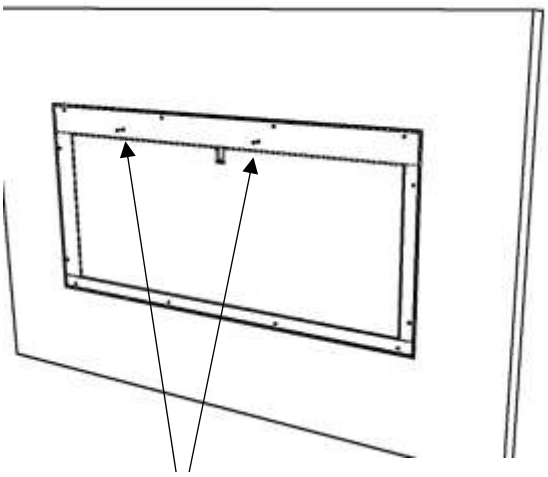

Forsænket bolt
M5x45

Skift af gasfjeder

Bemærk komponent under højt tryk! Fare!

Først bestilles artikel: GZF-SET-300 (med 300 mm slag) eller GZF-SET-150 (med 150 mm slag) ved PRIORIT AG.

Dette indeholder:

- Gasfjeder med afstandsholder
- 1 x afstandsholder for indbygget gasfjeder
- 2x kabelbinder for fastgørelse af afstandsholder

Efter modtagelse af artikel fortsættes som følger!

- Klap åbnes med revisionsværktøj. **Billede A**
- Den medfølgende afstandsholder (1) føres om stempel (2) på gasfjeder (3) og fastgøres med kabelbinder (4).

  Billede B og C

Billede B

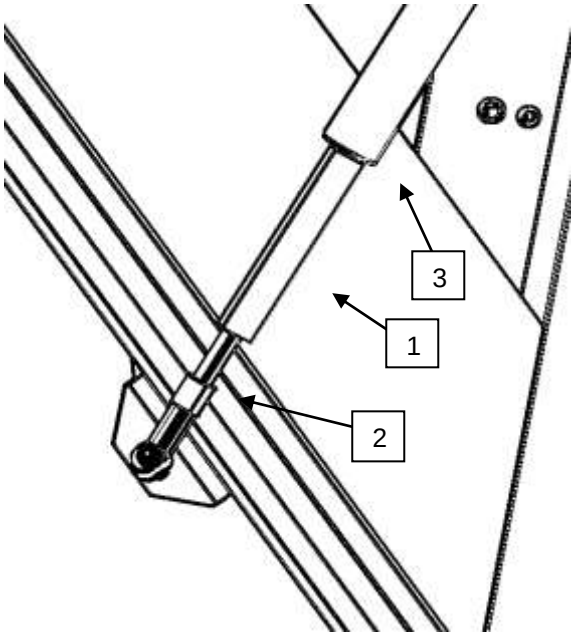

Billede A

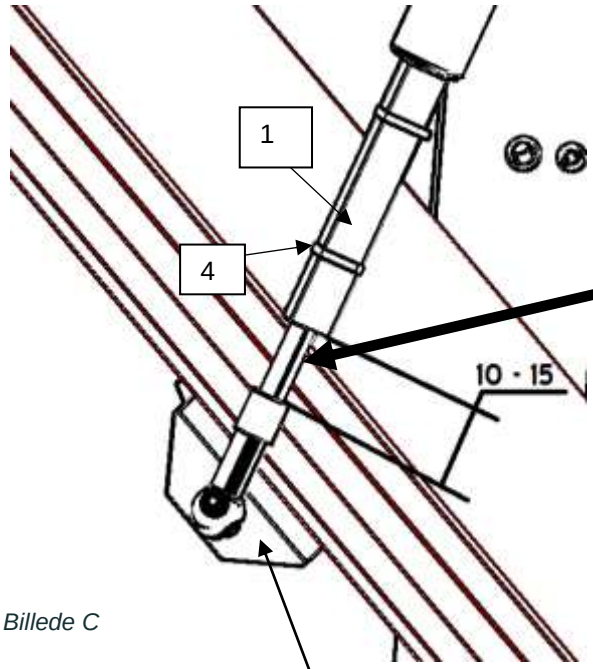

Med revisionsværktøj anbringes klapfløj så der er 10–15 mm mellemrum mellem stempelende og afstandsholder!

Billede C

Nedre beslag

Øvre beslag

Først drejes gasfjeder ud af det øverste beslag, herefter løsnes af det nederste beslag!

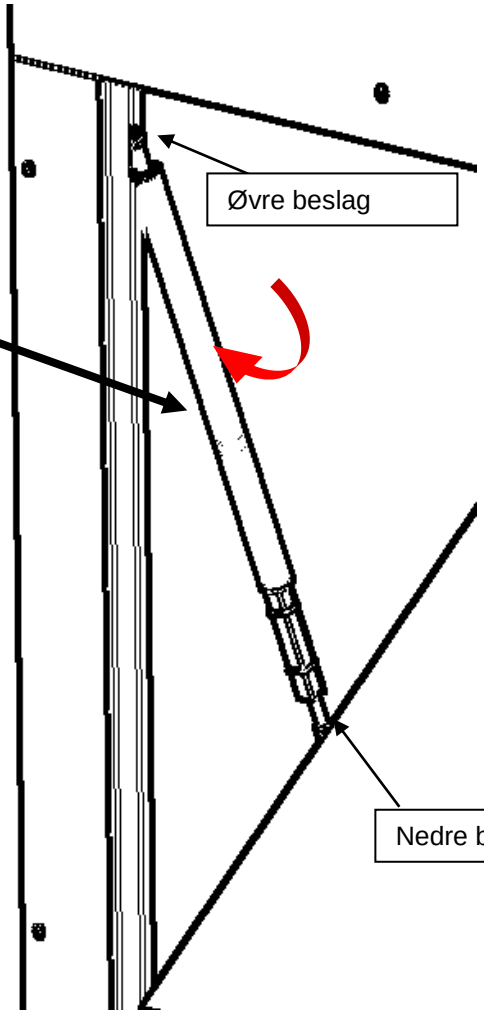

- Når gasfjeder er fjernet, kan den nye gasfjeder monteres i omvendt rækkefølge.
- Efter montage fjernes kabelbinder og afstandsholder.
- Efterfølgende gennemføres en prøvekørsel.

Teknisk information for kædedrev

Nedre beslag

PRIORIT
Fire | Resistant | Components

Tekniske data kædedrev og sikkerhedsanvisninger

aumüller

Assembly and Commissioning Instructions

according to Machinery Directive 2006/42/EC (annex VI)

KSA S12 24V DC / KSA S12 230V AC CHAIN DRIV FOR WINDOWS CE

aumüller

CONTENTS

01		Abbreviations Target Groups Warning and Safety Symbols Intended Use Safety Instructions	3 - 8
02	24V 230V	Data sheet KSA S12 24V and KSA S12 24V Z Data sheet KSA S12 230V and KSA S12 230V Z Explanations on the version „Z" Explanations on the product label	9 - 12
03		Areas of application and Casement sizes	13
04	INSTALLATION STEP 1: INSTALLATION STEP 2: INSTALLATION STEP 3:	Inspection before the installation Installation prerequisite and Installation preparation Adjusting the initial chain tension and smooth running	14 - 16
05	INSTALLATION STEP 4: INSTALLATION STEP 5: INSTALLATION STEP 6: INSTALLATION STEP 7: INSTALLATION STEP 8:	Determine the casement brackets Determine the frame brackets (Application examples) Hole layout for frame bracket and casement bracket Assembly casement bracket Assembly frame bracket	17 - 29
06	INSTALLATION STEP 9:	Concealing the drive	30 - 32
07	INSTALLATION STEP 10: INSTALLATION STEP 11: INSTALLATION STEP 12:	Electric Connection Supply lines of drives to the control unit Safety check and Test run Troubleshooting, Service and Repair Maintenance and Modification	33 - 40
08		Removal and Disposal Liability Warranty and After-Sales Service Certificates	41 - 43

ABBREVIATIONS

Index of abbreviations	
These abbreviations are used consistently throughout these assembly & operating instructions. Unless stated differently, all dimensions indicated in this document are in mm. General tolerances in accordance with DIN ISO 2768-m.	
A	drive
AK	connection cable / drive cable
AP	cover cap
BD	hinge
Fxxx	casement bracket
FAB	overall width of casement
FAH	overall height of casement
FG	casement weight
FL	casement
FÜ	casement overlap
HSK	main closing edge
Kxxx	frame bracket
L	construction lenghth of drive
MB	central hinge
NSK	side closing edge
RA	frame
RAB	overall width of frame
RAH	overall height of frame
SL	snow load
→	opening direction

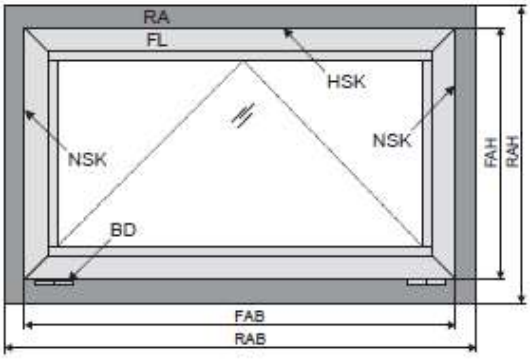

WARNING AND SAFETY SYMBOLS IN THESE INSTRUCTIONS:

The symbols used in the instructions shall be strictly observed and have the following meaning:

DANGER — Failure to comply with the warning notes results in irreversible injuries or death.

WARNING — Failure to comply with the warning notes can result in irreversible injuries or death.

CAUTION — Failure to comply with the warning notes can result in minor or moderate (reversible) injuries.

NOTE — Failure to comply with the warning notes can lead to damage to property.

Caution / Warning
Danger due to electric current.

Caution / Warning
Risk of crushing and entrapment during device operation (is provided as a sticker with the drive).

Attention / Warning
Risk of damage to / destruction of drives and / or windows.

TARGET GROUP

These instructions are intended for trained personnel and operators of systems for natural smoke ventilation (NRA / SHEV) (natural smoke exhaust system / smoke and heat exhaust system) and natural ventilation via windows, who are knowledgeable of operating modes as well as the remaining risks of the system.

WARNING This device is not intended for use by persons (including children) with physical, sensory or mental limitations or lacking experience and / or knowledge, unless they are supervised by a person who is responsible for the safety or were instructed by him on the usage of this equipment. Children should be supervised to ensure that they are not playing with this device.
Cleaning and operator's maintenance may not be performed by children without supervision.

01

INTENDED USE

Area of application / Scope of application

This drive is intended for the electromotive opening and closing of windows in facade and roof areas.

The prime task of this product, in combination with a window and a suitable external control unit, **is to evacuate hot smoke and combustion gases in case of fire**, to safe human lives and protect material assets. Furthermore, combined with a suitable external control unit, the electromotive operated window ensures **fresh air supply for the natural ventilation** of the building.

NOTE

By attaching the drive to a movable element of the window a so-called "power-operated window" is created which, according to the Machinery Directive 2006 / 42 / EG, represents a machine.

Intended use according to the Declaration of Conformity

The drive is intended for stationary installation and electrical connection at the window as part of a building.

In accordance with the attached Declaration of Conformity the drive, in combination with an external Control Unit from AUMÜLLER, is released for its intended use at a power-operated window **without an additional on-site risk assessment** for the following use:

- Application for natural ventilation
  - with an installation height of the drive of at least 2,5 m above the floor, or
  - with an opening width at the HSK of the operated element of < 200 mm by a simultaneous speed of < 15 mm/s at the HSK in closing direction.
- Application as NSHEV (natural smoke and heat exhaust ventilators) for ventilation without dual function for ventilation in accordance with EN12101-2.

⚠ WARNING

Attention must be paid to possible hazards when used with tilting or rotating windows, whose secondary closing edges are located at less than 2,5 m installation height above the floor, under consideration of the Control Unit and usage!

We as manufacturers are well aware of our duties and responsibilities regarding the development, manufacturing and placing of safe window drives on the market and consistently implement them. Ultimately, however, we have no direct influence on the usage of our drives. Therefore, as a precaution, we point out the following:

- The **constructor or his agent** (architect, specialist planner) **are obligated** by law **to evaluate the hazards to persons**, originating from the usage, installation position, opening parameters as well as the planned type of installation of the power operated window and the external Control Unit, already **in the planning phase and to establish necessary protective measures**.
- The **constructor / manufacturer** of the machine "power-operated window" **must implement** the planned **protective measures** at the installation site or, if not yet established, **determine them** by theire own responsibility and detect or **minimize possible remaining risks**.

The need for a risk assessment at the installation site due to the reasonably foreseeable misuse.

A risk assessment in accordance with the Machinery Directive 2006 / 42 / EG for the usage of the power-operated window **for natural ventilation is absolutely necessary** under the following conditions:

- the installation height of the drive is < 2,5 m above the floor **and**
- the opening width at the HSK > 200 mm, **or**
- the closing speed at the HSK is > 15 mm/s, **or**
- the opening speed at the HSK is > 50 mm/s, **or**
- the closing force at the HSK is > 150 N

The following flow chart can be applied, which also includes the protective measures in accordance with EN 60335-2-103/2016-05.

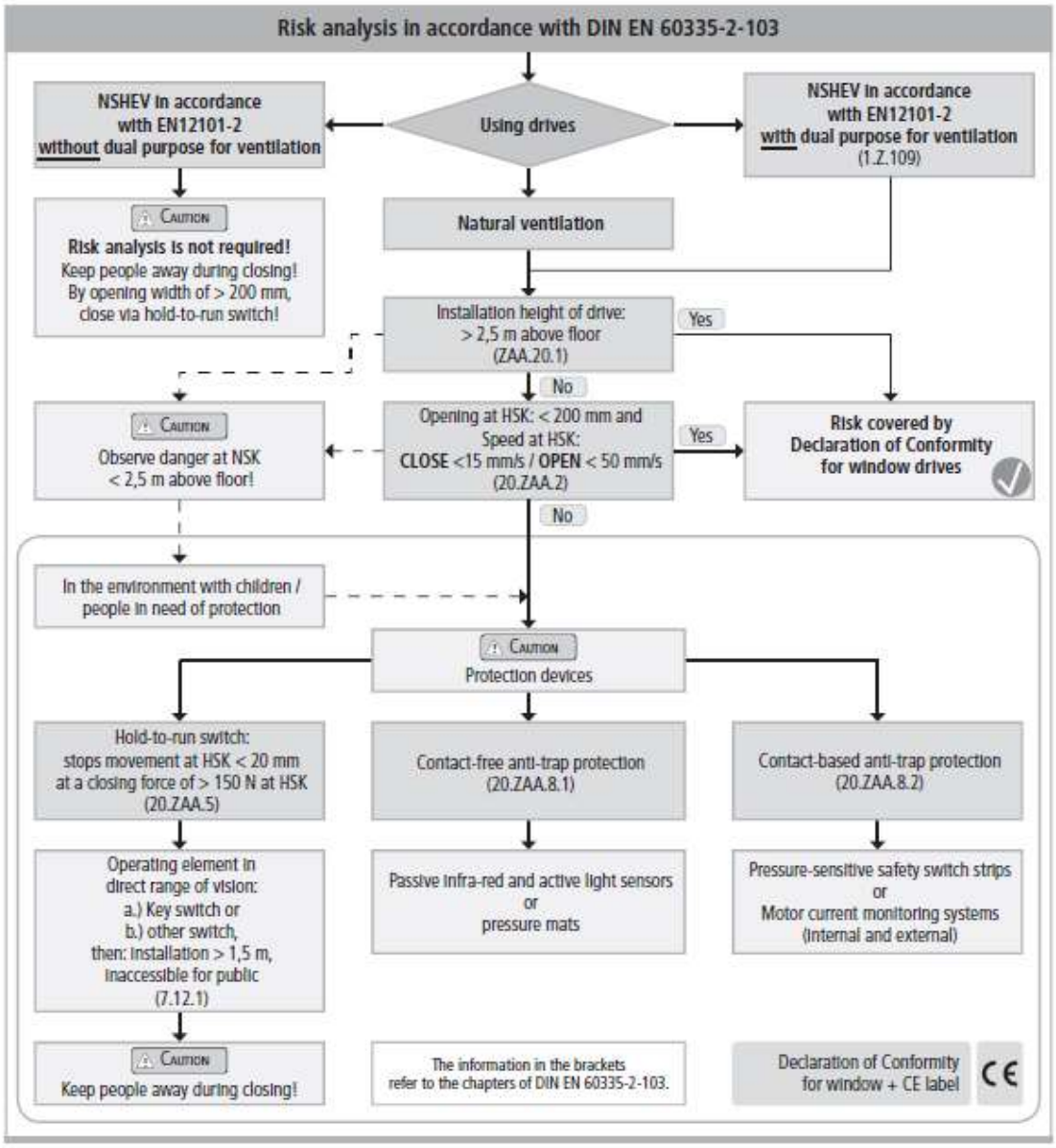

Casement data

Facade:	bottom-hung window, top-hung window, side-hung window.
Roof:	roof window / sky light.
Opening direction:	inward / outward opening.
Profile material:	aluminum, steel, plastic or wood.

NOTE

The casement measurements supplied are only for orientation purposes.
It is imperative that the **force-path diagram** of the drives are observed.

When inspecting the drives for conformity with on-site requirements the following items must be observed:

- total weight of casement (glass + frame),
- additional loads: snow load / wind load (suction / pressure),
- casement size (FAB x FAH),
- side ratio FAB / FAH,
- installation / inclination angle,
- required opening area (geometric / aerodynamic),
- crosswind influences,
- driving force and stroke,
- mounting site at the window frame and casement frame.

01

SAFETY INSTRUCTIONS

WARNING

It is important to follow these instructions for the safety of persons. These instructions shall be kept in a safe place for the entire service life of the products.

Risk of crushing and entrapment!
Window can close automatically!

The integrated load cut-off stops the drive during closing and opening when the drive is overloaded.
The compressive force is absolutely sufficient to crush fingers in case of carelessness.

Area of application

The drive shall only be used according to its intended use. For additional applications consult the manufacturer or his authorized dealer.

WARNING

Do not misuse the drive for other lifting operations! Do not allow children to play with this drive or its regulating and / or control units, including the remote control!

Always check whether the system complies with current regulations. Special attention must be paid to the opening width, the opening area, the opening time and the opening speed of the window, the temperature range of the drives / external devices and cables as well as the cross section of the connecting cables as function of the cable length and power consumption.

All devices must be permanently protected from dirt and moisture, if the drive is not explicitly suitable for use in wet areas (see technical data).

Installation

These instructions address expert and safety-conscious electricians and / or qualified personnel knowledgeable in electrical and mechanical drive installation.

NOTE

The safe operation, avoidance of injury to persons and damage to property, as well as risks, is only guaranteed by proper installation and setting according to these installation instructions.

All specifications for installation must be checked independently and, if necessary, adjusted at the installation site. The connection assignment, the electrical supply data (see machine plate) and performance limits (see technical data) as well as the mounting and installation instructions of the drive must be strictly observed and adhered to!

Never connect 24 V DC drives to 230 V AC mains voltage!
Danger to life!

Do not reach into the window rabbet or the operating element (chain or spindle) during installation and operation! Ensure that, based on the installation position and the opening movement of the casement, persons cannot be trapped between the driven part of the window and surrounding fixed components (e.g. wall).

Mounting material

The required mounting material must be modified to fit the drive and occurring load and, if necessary, supplemented.

NOTE

Before installing the drive, check whether the casement is in good mechanical condition, the weight in balance and whether it opens and closes easily!

Danger spots by crush and shear points

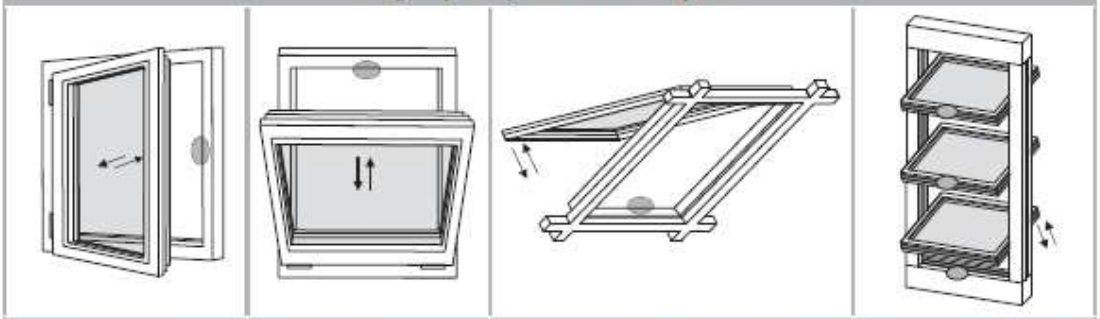

Side-hung	Bottom-hung	Roof windows / skyskylight domes	Louvre windows

Danger spots: crush and shear points according to DIN EN 60335-2-103

Crush and shear points
To avoid injuries, **crushing and shear points** between casement and frame must be secured **against entrapment up to an installation height of 2,5 meters above the floor** with appropriate measures. This can be achieved e.g. by using contact-based or contactless protective devices against entrapment, which stop the motion through contact or through interruption by a person. At a force higher than 150 N at the main closing edge the motion must stop within 20 mm. A warning symbol at the opening element must indicate this clearly.

Unintentional or independent opening or falling
Casements are to be hinged or secured such way that in case one of the mounting elements fails it will not crash / slam down or move in an uncontrolled manner by e.g. using double suspensions, safety scissors, casement stays.
Tilting windows shall be equipped with safety scissors or similar devices to avoid damages and risks of injury for persons through improper installation and operation. The safety scissors must be adjusted to the opening stroke of the drive (see technical data) to avoid blocking. The opening width of the safety scissors must be bigger than the drive stroke.

⚠ WARNING The movable casement must be secured against unintentional or independent opening as well as falling down.

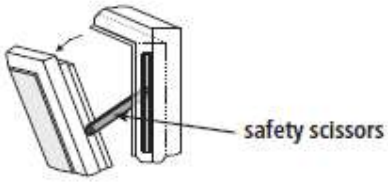

Routing cables and electrical connection
Routing or installing electrical lines and connections may be performed only by approved specialist companies. Never operate drives, control units, operating elements and sensors at operating voltages and connections contrary to the specifications of the manufacturer.
All relevant instructions shall be observed for the installation, specifically:
- VDE 0100 Setting up high-voltage systems up to 1000 V
- VDE 0815 Wiring cables
- Specimen Guideline on Conduits German designation (MLAR).

All-pole disconnecting devices shall be installed in the permanent electrical installation or external Control Unit for the drive.
The mains supply lines 230 V / 400 V AC shall be protected separately!

⚠ WARNING Damaged mains supply lines of drives with plug connectors may only be replaced by the manufacturer or qualified service / maintenance personnel!
Power cables which are fixed to the drive casing cannot be replaced. If the cable is damaged the device must be scrapped!

The types of cable, cable lengths and cross-sections shall be selected in accordance with the manufacturer's technical data. If necessary, the cable types shall be coordinated with the competent local authorities and energy supply companies. Low-voltage lines (24 V DC) shall be routed separate from the high-voltage lines. Flexible cables may not be flush-mounted. Freely suspended cables shall be equipped with strain reliefs.

Cables must be laid such way that they cannot be sheared off, twisted or bent during operation. Drive cables laid into closed window profiles must be protected by insulating tubes with a sufficient temperature resistance. Through holes shall be equipped with cable sleeves!

Clamping points shall be checked for tightness of threaded connections and cable ends. Access to junction boxes, clamping points and external drive control systems shall be ensured for maintenance work.

Commissioning, operation and maintenance
After the installation and after each modification in the set up all functions shall be checked with a trial run. It shall be ensured that drive and casement are set correctly and that security systems, if available, are functioning properly. After the installation of the system is completed the end-user shall be introduced to all important operating steps. If necessary, he must be advised of all remaining risks / dangers.
The end-user shall be instructed in intended use of the drives and, if necessary, the safety instructions. The end-user shall be specifically instructed that no additional forces, except for the pressure and tension in the opening and closing direction of the casement, may be applied to the spindle, chain or lever of the drive.

01

NOTE Post warning signs!

During the proper assembly of drives with mounting elements at a window, and the connection to an external control unit, the interfaces resulting from mechanical and electrical performance characteristics of single elements shall be observed.

CAUTION Other persons must be kept away from the casement when a hold-to-run switch (pushbutton) is operated or when a window, which has been opened by a smoke and heat exhaust system, is closing!

CAUTION The operating element of hold-to-run switches must be installed within direct view from the window, but apart from moving elements. If the switch is not a key-operated switch it must be installed at a minimum height of 1,5 m and inaccessible to the public!

CAUTION Do not allow children to play with permanently mounted control devices and keep remote controls out of reach for children!

During cleaning, maintenance work and while exchanging parts the drive must be completely disconnected from the power supply and secured against unintentional reactivation.

WARNING Do not use drive or casement when repair or re-setting work has to be performed!

Replacement parts, fasteners and controls
The drive shall only be operated with control devices from the same manufacturer. There is no liability, warranty or customer service if third-party parts are used. Exclusively original replacement parts of the manufacturer shall be used for mounting elements or expansions.

Ambient conditions
The product may not be subjected to impacts or falls, or to vibrations, moisture, aggressive vapors or other harmful environments, unless the manufacturer released it for one or more of these environmental conditions.

- **Operation:**
  Ambient temperature: -5 °C … +75°C
  Relative humidity: < 90% less 20°C;
  < 50% less 40°C;
  no formation of condensation
- **Transport / Storage:**
  Storage temperature: -5°C … +40°C
  Relative humidity: < 60%

Accident prevention regulations and workmen's compensation insurance guidelines
For work on or in a building or building part the provisions and instructions of the respective accident prevention regulations (UVV and workmen's compensation insurance guidelines (BGR /ASR) shall be observed and adhered to.

Declaration of Conformity
The drive is manufactured and inspected in accordance with European guidelines. The respective Declaration of Conformity is on hand.
In case the operation of the drive differs from the intended use, a risk evaluation for the complete power-operated window system shall be performed and a Declaration of Conformity according Machinery Directive 2006 / 42 / EG issued.

DATA SHEET KSA S12 24V AND KSA S12 24V Z

24V

- Application: natural ventilation, SHEV, ferralux®-NSHEV
- Internal Intelligent Control Electronics S12
- Adjustable chain tension / Mechanical chain unlocking
- Version „Z": Programmable feedback limit position „OPEN" and „CLOSE" (max. 24V, 500 mA)

Equipment:

- Additional **AUMÜLLER-Click plug set** for multi-drive operation

Options

- Programmable special functions
- M-COM for automatic synchronised run of multi drive systems and automatic sequence control with locking drives (S3 / S12)

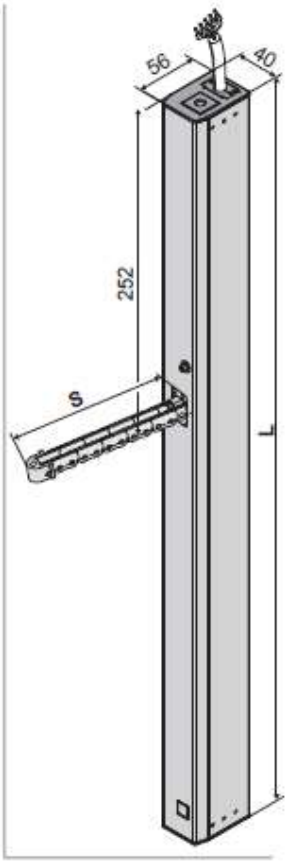

TECHNICAL DATA

U_N	Rated voltage	24V DC (± 20 %), max. 2 Vpp
I_N	Rated current	0,9 A
I_A	Cut-off current	1,2 A
P_N	Rated power	22 W
ED	Duty cycle	30 % (ON: 3 min./OFF: 7 min.)
	Protection rating	IP 32
	Ambient temperature range	-5 °C ... +75 °C
F_Z	Pulling force max.	600 N
F_A	Pushing force s > 800 mm only for pulling application	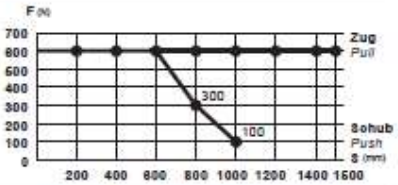
F_U	Pullout force	3.000 N (fastening depended)
	Chain	Stainless steel
	Connecting cable	non-halogen, grey 5 x 0,5 mm², ~ 3 m
v	Speed	s < 400 8,0 mm/s 8,0 mm/s s 500 – 600 12,0 mm/s 8,0 mm/s s > 600 13,5 mm/s 8,0 mm/s
s	Stroke	250 – 1.500 mm (± 5 %)
L	Length	see order data
Sound pressure level A		≤ 70 dB (A)

OPTION

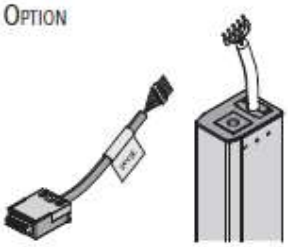

AUMÜLLER chain drives have an integrated cable routing with connection sockets on both housing ends. This enables the following options:

- **AUMÜLLER-Click plug solution** (for 24 V DC) with various cabel lengths
  Part.-No.: **501250** - 1 m cable length
  501258 - 2 m cable length
  501251 - 3 m cable length
  501252 - 5 m cable length
  501253 - 10 m cable length
- Series connection of several drives into multi drive systems
- Power supply from both sides

aumüller

DATA SHEET

24V

02

ORDER DATA					
s [mm]	L [mm]	Version	Finish	PU / pcs.	Part.-No.
250	515	KSA 250 S12 24V	E6/C-0	1	522725
300	591	KSA 300 S12 24V	E6/C-0	1	522730
400	591	KSA 400 S12 24V	E6/C-0	1	522740
500	693	KSA 500 S12 24V	E6/C-0	1	522750
600	693	KSA 600 S12 24V	E6/C-0	1	522760
800	794	KSA 800 S12 24V	E6/C-0	1	522780
1000	896	KSA 1000 S12 24V	E6/C-0	1	522810
1200	998	KSA 1200 S12 24V	E6/C-0	1	522812
1500	1151	KSA 1500 S12 24V	E6/C-0	1	522815

ORDER DATA					
s [mm]	L [mm]	Version	Finish	PU / pcs.	Part.-No.
250	515	KSA 250 S12 24V Z	E6/C-0	1	522723
300	591	KSA 300 S12 24V Z	E6/C-0	1	522733
400	591	KSA 400 S12 24V Z	E6/C-0	1	522743
500	693	KSA 500 S12 24V Z	E6/C-0	1	522753
600	693	KSA 600 S12 24V Z	E6/C-0	1	522763
800	794	KSA 800 S12 24V Z	E6/C-0	1	522783
1000	896	KSA 1000 S12 24V Z	E6/C-0	1	522813
1200	998	KSA 1200 S12 24V Z	E6/C-0	1	522823
1500	1151	KSA 1500 S12 24V Z	E6/C-0	1	522853

OPTIONS		
Special model	PU / pcs.	Part.-No.
Drive housing painted/powder coated in other RAL colours		
Lump sum for coating		516030
Specify at order stage:	1 - 20	516004
	21 - 50	516004
	51 - 100	516004
	up 101	516004
Microprocessor programming S12		
Electronic stroke reduction 24V S12		524190
Programming drives 24V / 230V S12		524180
Optional accessories	PU / pcs.	Part.-No.
M-COM® Click Configuration module for synchronised multi-drive systems	1	524167
M-COM Click Configuration module for synchronised multi-drive systems	1	524177
AUMÜLLER-Click plug solution 24 V - cable length 1 m	1	501250
AUMÜLLER-Click plug solution 24 V - cable length 2 m	1	501258
AUMÜLLER-Click plug solution 24 V - cable length 3 m	1	501251
AUMÜLLER-Click plug solution 24 V - cable length 5 m	1	501252
AUMÜLLER-Click plug solution 24 V - cable length 10 m	1	501253

EXPLANATIONS ON THE VERSION „Z" (FOR EXAMPLE KSA S12 24V Z)

24V 230V

Drives with version „Z" (e.g. KSA S12 24V **Z**) have an additional volt free contact with connection for an external signal monitoring.
The volt free contact (max. 24V, 500mA) is open when the drive is in **CLOSED** position.

aumüller

DATA SHEET

230V

02

ORDER DATA					
s [mm]	L [mm]	Version	Finish	PU / pcs.	Part.-No.
250	591	KSA 250 S12 230V	E6/C-0	1	497025
300	667	KSA 300 S12 230V	E6/C-0	1	497030
400	667	KSA 400 S12 230V	E6/C-0	1	497040
500	769	KSA 500 S12 230V	E6/C-0	1	497050
600	769	KSA 600 S12 230V	E6/C-0	1	497060
800	870	KSA 800 S12 230V	E6/C-0	1	497080
1000	972	KSA 1000 S12 230V	E6/C-0	1	497110
1200	1074	KSA 1200 S12 230V	E6/C-0	1	497112
1500	1227	KSA 1500 S12 230V	E6/C-0	1	497115

ORDER DATA					
s [mm]	L [mm]	Version	Finish	PU / pcs.	Part.-No.
250	591	KSA 250 S12 230V Z	E6/C-0	1	497023
300	667	KSA 300 S12 230V Z	E6/C-0	1	497033
400	667	KSA 400 S12 230V Z	E6/C-0	1	497043
500	769	KSA 500 S12 230V Z	E6/C-0	1	497053
600	769	KSA 600 S12 230V Z	E6/C-0	1	497063
800	870	KSA 800 S12 230V Z	E6/C-0	1	497083
1000	972	KSA 1000 S12 230V Z	E6/C-0	1	497113
1200	1074	KSA 1200 S12 230V Z	E6/C-0	1	497123
1500	1227	KSA 1500 S12 230V Z	E6/C-0	1	497153

OPTIONS		
Special model	PU / pcs.	Part.-No.
Drive housing painted/powder coated in other RAL colours: Lump sum for coating		516030
Specify at order stage:	1 - 20	516004
	21 - 50	516004
	51 - 100	516004
	up 101	516004
Microprocessor programming S12		
Programming synchronised multi-drive systems 230V S12		495588
Electronic stroke reduction 24V S12		524190
Programming drives 24V / 230V S12		524180
Optional accessories	PU / pcs.	Part.-No.
AUMÜLLER-Click plug solution 230 V - cable length 1 m	1	501271
AUMÜLLER-Click plug solution 230 V - cable length 2 m	1	501272
AUMÜLLER-Click plug solution 230 V - cable length 3 m	1	501273
AUMÜLLER-Click plug solution 230 V - cable length 5 m	1	501275
AUMÜLLER-Click plug solution 230 V - cable length 10 m	1	501280

EXPLANATIONS ON THE PRODUCT LABEL

24V **230V**

The product label provides information on the most important caracteristics, such as:

- manufacturer's address
- article reference number and name
- technical caracteristics
- date of manufacturing with firmware version
- serial number

NOTE Never install and operate damaged products.

In the event of any complaints, please indicate the product serial number (SN) (see product label).

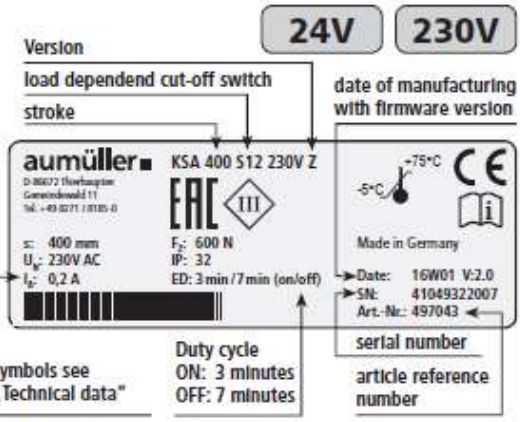

AREAS OF APPLICATION AND CASEMENT SIZES

24V 230V

Areas of application and casement sizes:

Mounting of drives up to a casement size of max. 4m² (depending on the system)

Top-hung casement and bottom-hung casement inward opening

FAB min. = L + 100 mm

FAB max. = 1400 mm / solo
= 2500 mm / tandem

Top-hung casement

Bottom-hung casement

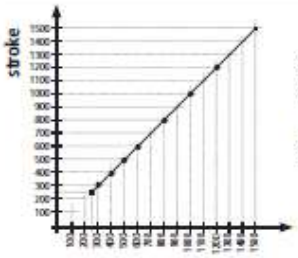

FAH max. = 2500 mm

with frame bracket **K-B1**

minimum space required on frame 52 mm

Top-hung casement and bottom-hung casement outward opening

FAB min. = L + 100 mm
FAB max. = 1400 mm / solo
= 2500 mm / tandem

FAH min. = 500 mm
(for stroke 500)
FAH max. = 2500 mm

Top-hung casement

Bottom-hung casement

Roof window

FAB min. = L + 100 mm
FAB max. = 1400 mm / solo
= 2500 mm / tandem

FAH min. = 450 mm
FAH max. = 2500 mm

total weight casement including snow load

KSA 250 mm stroke ≤ max. 110 kg
KSA 300 mm stroke ≤ max. 110 kg
KSA 400 mm stroke ≤ max. 110 kg
KSA 500 mm stroke ≤ max. 110 kg
KSA 600 mm stroke ≤ max. 110 kg
KSA 800 mm stroke ≤ max. 50 kg

Top-hung casement

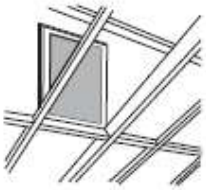

Bottom-hung casement

Snow load on roof windows for SHEV-systems

Example:
snow load = 60 kg
(Casement area x Typical snow load)

Example: FG = 40 kg

Example calculation

Establish snow loading based on national standards /directives
(In Germany according to DIN 1055-5)
total weight = FG + snow load
total weight = (40 kg + 60 kg) = 100 kg

03

INSTALLATION STEP 1: INSPECTION BEFORE THE INSTALLATION

24V 230V

WARNING Important instructions for a safe installation. Observe all instructions, wrong installation may result in serious injury!

Storage of drives at the construction site
Protective measures against damages, dust, moisture or contamination shall be taken. Store drives intermediately only in dry and well ventilated rooms.

Inspection of drives before installation
Check drives and window before installation for good mechanical condition and completeness. The chains / spindles of the drives must be extendable or retractable easily. The casement must run smoothly and the weight must be in balance.

NOTE We recommend the use of our test kit for the inspection of drives with the rated voltage 24V= / 230V~ (see table below). Damaged products may not be operated under any circumstance.

04

Test kit for drives	
Order number:	533981
Application:	Test kit to check running direction and communication of drives 24V DC or 230V AC (including batteries)
Supply voltage:	230V AC
Drive types:	24V DC / 230V AC
Drive current:	max. 3 A
Display:	drive current, battery charge
Ambient temperature:	-5 °C ... + 75 °C
Plastic housing:	250 x 220 x 210 mm
Weight:	approx. 3,6 kg
Feature / equipment:	Control elements: 2 switches + 1 button

The test procedure of drives may only be performed on a non-slip and secured mat or a test fixture. During the test run the test element must not be interfered with. The test my only be conducted by or under the supervision of expert personnel.

For testing chain drives the chain must be extended and retracted at an angle of approx. 90°. The spindle tubes of spindle drives in round housing tubes must be secured against independent spinning before starting the test to avoid deviations in the position encoder.

Inspection of the intended use
The planned use of the drive must be checked for compliance with its intended use. If used otherwise the liability and warranty claim expires.

Predictable misuse
It is imperative that foreseeable misuse of drives is avoided! Here are a few examples:

- do not connect 24 V DC drives to a 230 V AC mains voltage,
- observe synchronous run and sequence control by drives with multiple interconnection,
- use drives only indoors,
- avoid additional force influences, e.g. transverse forces.

Testing mechanical requirements
Prior to the start of the installation check whether :

- the support surface and the profile static for the load transmission is sufficient,
- a support construction for the secure fastening of the drives is required,
- cold bridges (thermal separation) are avoidable at action points,
- there is sufficient space for the swivel movement of the drive.

If not, counter measures must be taken!

⚠ The support surface of the frame brackets or casement brackets must rest completely on the window or frame profile. There must be no tilting of the fastening elements during extension and retraction of the drives. A safe and solid fastening must be ensured at the window profile.

CAUTION It is imperative that the sufficiently mechanical stiffness of the fastener type as well as of the swivel range of the drive is observed.
If this is not guaranteed another type of fastening or another type of drive must be selected.

INSTALLATION STEP 2: INSTALLATION PREREQUISITE AND INSTALLATION PREPARATION

The following conditions must be fulfilled for the installation of the drives so they can be properly assembled with other parts and constructed to a complete machine at the window without impairing the safety and health of persons:

1. The design of the drive must fulfill the requirements.
2. The fastening accessories (casement brackets or frame brackets) must fit the window profile; the profile-dependent hole lay-out must be complied with.
3. The space required for the installation of the drive on the frame and casement profile must be sufficient.
4. The window must be in perfect mechanical condition before the installation. It should open and close easily.
5. The fastening material for the installation of the drive must fit the window material (see table).

Wood windows	wood screws: i.e. DIN 96, DIN 7996, DIN 571 with head-type: round head with slot, round head with cross, hex head, special type	
steel, stainless steel, aluminum windows	self-tapping screws, thread screws, sheet-metal screws i.e. ISO 4762, ISO 4017, ISO 7049 , ISO 7085, DIN 7500 with head-type: cylinder head with hex socket, internal serration (Torx), Phillips head or external hex head blind rivet nut	
plastic windows	screws for plastic i.e. DIN 95606, DIN 95607, ISO 7049, ISO 7085, DIN 7500 with head-type: round head with cross, external hex head, Torx	Recommendation: if possible, screw through two cavity webs

Tools required

- Marker,
- Grains,
- Hammer,
- Screwdriver (slotted-head, cross or Torx) size by site conditions,
- Hexagonal wrench size 3 / 4 / 5 / 6,
- Torque wrench,
- Power drill,
- Threadlock adhesive,
- possibly a tool for blind rivet nuts (size 6).

Check window data on site

- Measure FAB and FAH.
- Check / calculate weight of casement.
  If unknown, it can be determined approximately with the following formula:

$$G\ (\text{Casement weight})\ [\text{kg}] = \text{FAB}\ [\text{m}] \cdot \text{FAH}\ [\text{m}] \cdot \text{Glass thickness}\ [\text{mm}] \cdot 2{,}5\ (\text{glass-density}) \cdot 1{,}1\ (\text{frame share})$$

- Check / calculate the required drive force and compare with drive data . If unknown, it can be determined approximately with the following formula:

$$F\ [\text{N}]_{\text{Facade}} = \frac{5{,}4 \cdot G\ [\text{kg}] \cdot s\ [\text{m}]}{a\ [\text{m}]}$$

$$F\ [\text{N}]_{\text{Roof}} = \frac{5{,}4 \cdot G\ [\text{kg}] \cdot \text{FAH}\ [\text{m}]}{a\ [\text{m}]}$$

a = Distance of action point to hinges
F = Drive force
s = Stroke

Scope of delivery:

Prior to assembly, check items quantity in the delivery for completeness.

Accessories for chain drive		
		Assembly and Commissioning Instructions
	1	Countersunk screws M8 (2x)
	2	Brass washers (2x)
	3	Cover caps (2x)
	4	Chain unlocking key (1x)
	5	**AUMÜLLER-Click plug solution** (1x) depending on the drive-version in 24V or 230V
	6	**AUMÜLLER-Click pug set** (24V) for multi-drive operation (1x)
	7	Warning sign sticker „Risk of entrapment" (1x)

INSTALLATION STEP 3:
ADJUSTING THE INITIAL CHAIN TENSION AND SMOOTH RUNNING

24V 230V

Adjust the initial chain tension on site (bottom-hung casements only)

The smooth running of the drive can be optimised under low load by screwing in the studs (clockwise).
At the factory setting the studs protrude with 3.5 mm out of the housing. In this position the chain is fully tensioned.

Bottom-hung casements only! Do not change the factory setting for other types of casements!

- The initial chain tension (pre-tension) is reduced by screwing in the stud (max. 5 mm = 7 complete screw rotations).

Optimise the smooth running carefully and check the chain tension.
Otherwise, the chain can buckle (backlash) during operation in the thrust (push) direction.

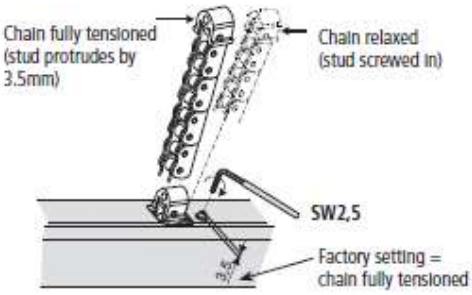

Always note the force-path diagram (see chapter „DATA SHEET KSA S12 24V / KSA S12 230V ") and rigidity of the chain, depending on the installed position!

In inclined and vertical uses, ensure that the chain becomes rigid automatically. This is secured if the drive is installed with the motor side (cable outlet) at the top (e.g. for side-hung windows with drive installed at the main closing edge).

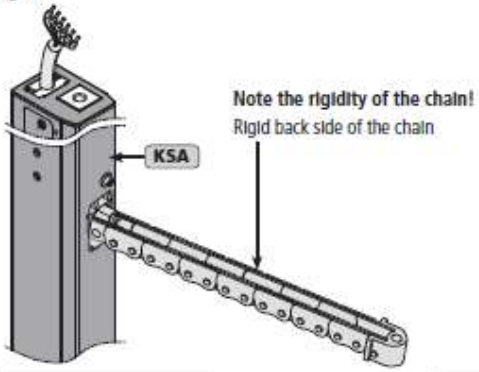

Soft run setting after manual unlocking of the chain

The drive has an electronic position detection. Just before the CLOSED position the chain retracts with reduced speed in the **soft run mode**, to protect the window and the drive.

- If the chain is unlocked manually and is completely pulled out by hand, on starting up ensure that the chain moves with reduced speed in soft run mode from approx. 40 mm before the CLOSED position.
- If necessary repeat this step several times.

Soft run	CLOSED position
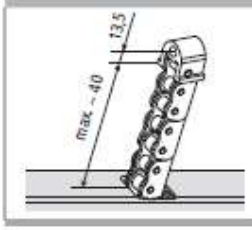	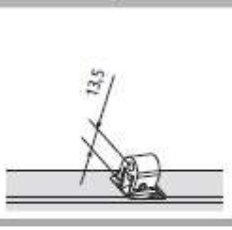

Manual unlocking of chain

If soft run mode is **not** achieved on retracting the chain:

- Use the Chain unlocking key ❹ to unlock both chains and completely pull them out manually.
- Re-close the drive completely electrically and note the soft run mode of app. 40 mm before the CLOSED position.
- Insert cover caps ❸.

If the soft run mode begins too early, it is adjusted automatically by the drive's electronics the next time the window is closed.

The manual chain unlocking function may only be used for **installation** purposes!

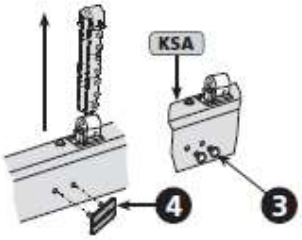

If the chain does not retract in soft run mode, the drive's transmission can be damaged, resulting in drive failure!

For multiple application the chains should always be pulled out of manually and moved in a CLOSE direction electrically with the same space interval.

INSTALLATION STEP 10: ELECTRIC CONNETCTION

24V 230V

Make sure when establishing the connection that there is no voltage at the terminals! Unused wires must be safely insulated!

The running direction of the 24V-drive may be changed by interchanging (polarity reversal) the wires **„BN – (brown)" - „BU – (blue)"**.

Wire colour coding	
Colour	DIN IEC 757
black	BK
white	WH
brown	BN
blue	BU
green / yellow	GN / YE
green	GN
violet	VT
grey	GY

Direction of travel	
OPEN	↑
CLOSE	↓

polarity reversal

Connection assignment 24V

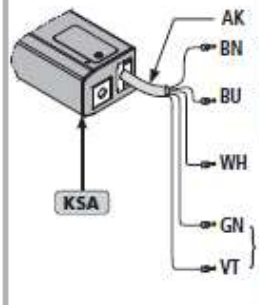

	↑	↓
BN	+	-
BU	-	+

WH is used for communication, with synchronized multi-drive operation

Version Z: contact max. 24 V, 500 mA (min. 10mA)

Connection assignment 230V

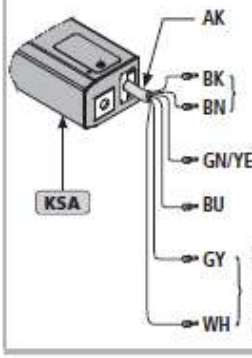

	↑	↓
	Open	Close
L	BN	BK

WH + GY is used for communication, with synchronized multi-drive operation or Version Z: (optional) contakt max. 24V, 500 mA (min. 10mA)

Multi-drive operation with master and slave 24V

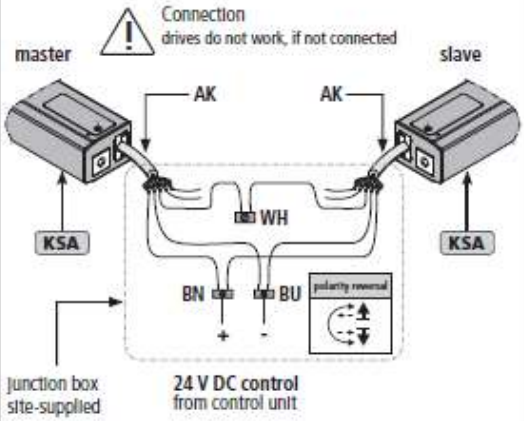

WH	is used for communication, with synchronized multi-drive operation.
Optional: 1 to 4 drives and max. 2 locking drives are possible.	

Multi-drive operation with master and slave 230V

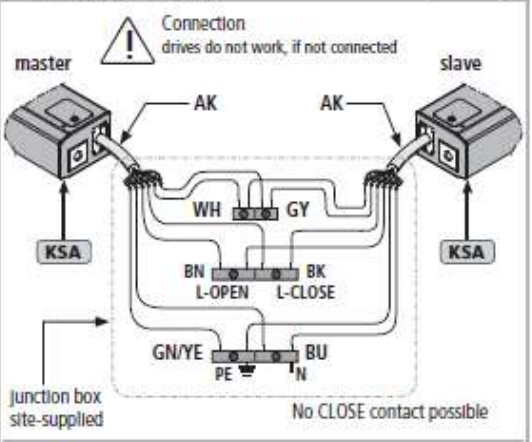

WH	is used for communication, with synchronized multi-drive operation.
Optional: 1 to 4 drives are possible.	

UniPC with configuration interface

24V 230V

Order number:	**524178**
Application:	Hard- and software for configuration of drives supplied by Aumüller Aumatic GmbH
Rated voltage.	24V DC +/-20%
Parameterizable drives:	24V DC type MP, S3, S12, S12 V.2 230V AC type S12, S12 V.2
Scope of delivery:	software UniPC (Downloadlink*), Interface "Parint", USB cable, connection cable * http://www.aumueller-gmbh.de/Downloads

Features / Equipment:
Power supply 24V DC is not included in the scope of delivery!
Any extended settings require a software licence.

Any reconfiguration of a drive is entirely at the user's own risk and responsibility.

Cable junction box (for renewal)

24V

Order number:	**513344**
Application:	to extend a drive cable
Rated voltage:	only for low voltage to max. 50V DC/AC
Material:	stainless steel (V2A)
Protection class:	IP 40
Dimensions:	25 x 27 x 150 mm
Equipment:	with cable gland (grey) including strain relief, with 2 loose ceramic terminals (bipolar).

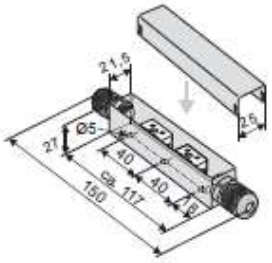

AUMÜLLER-Click plug solution

24V

Order number:	**501250 - 1 m cable length** - 24 V DC **501258 - 2 m cable length** - 24 V DC **501251 - 3 m cable length** - 24 V DC **501252 - 5 m cable length** - 24 V DC **501253 - 10 m cable length** - 24 V DC
Application:	Unitary plug-solution for all AUMÜLLER chain drives and AUMÜLLER folding arm drives
Rated voltage:	24V DC (± 20 %), max. 2 Vpp
Connecting cable:	non-halogen, grey 5 x 0,5 mm²
Terminal:	to 1,5 mm² - 5 pieces

- Flexible cable length
- Connect multiple drives in series connection
- Torsion-plug
- Locking hooks prevent withdrawal of the plug under tensile load
- Strain relief according DIN EN 60335-1 by screwing the housing halves

AUMÜLLER-Click plug solution

230V

Order number:	**501271 - 1 m cable length** - 230 V AC **501272 - 2 m cable length** - 230 V AC **501273 - 3 m cable length** - 230 V AC **501275 - 5 m cable length** - 230 V AC **501280 - 10 m cable length** - 230 V AC
Application:	Unitary plug-solution for all AUMÜLLER chain drives and AUMÜLLER folding arm drives
Rated voltage:	230V AC (± 20 %)
Connecting cable:	non-halogen, grey 6 x 0,75 mm²
Terminal:	to 1,5 mm² - 6 pieces

- Flexible cable length
- Connect multiple drives in series connection
- Torsion-plug
- Locking hooks prevent withdrawal of the plug under tensile load
- Strain relief according DIN EN 60335-1 by screwing the housing halves

AUMÜLLER-Click plug solution -
SITE-SUPPLIED CUSTOMISED CONSTRUCTION

24V 230V

The **AUMÜLLER-Click plug solution** enabling the use of site-supplied cable. It simplifies assembly and the electrical connection of the drives.

- Loosen the screws ❷ and remove the housing cover ❶.

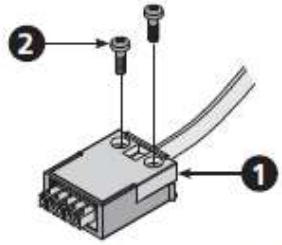

NOTE Locking hooks - at the housing cover ❶ - prevent withdrawal of the plug under tensile load.

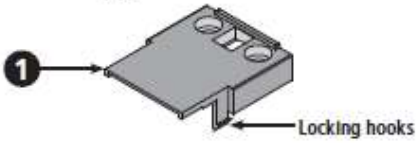

- On the underside of the plug housing ❸ are two openings for releasing the locking hooks.
  Push locking hook with a screwdriver inwards - and depress simultaneously.

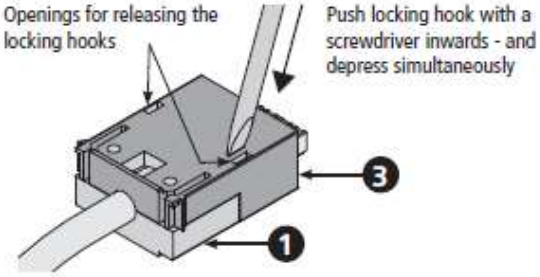

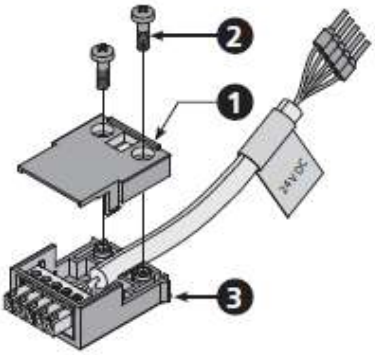

- Replace cable set - provided by the customer in place of connecting cable.
- Moung the housing cover ❶ with the both screws ❷.

NOTE Terminals ❹ to 1,5 mm².
The performances (especially the fire behavior) of locally provided cables, must be checked on own responsability on compliance with the application-specific local regulations!

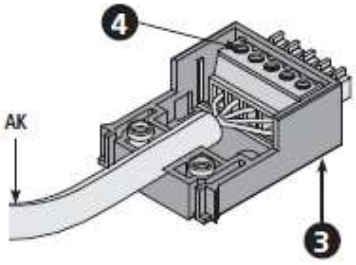

Connection assignment 24V

Function	Colour	DIN IEC 757
OPEN / CLOSE	blue	BU
OPEN / CLOSE	brown	BN
Data	white	WH
Rel: NO	violet	VT
Rel: NO	green	GN

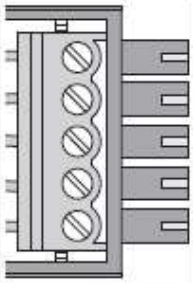

Connection assignment 230V

Function	Colour	DIN IEC 757
L1 (OPEN)	brown	BN
L2 (CLOSE)	black	BK
N	blue	BU
PE	green/yellow	GN / YE
(*)	grey	GY
(*)	white	WH

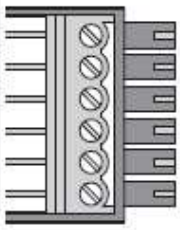

(*) Either feedback contact (version „Z") or constant control (synchronous control)

INSTALLATION STEP 11:
SUPPLY LINES OF DRIVES TO THE CONTROL UNIT

Observe current regulations and guidelines e.g. DIN 4102-12 regarding the "Fire behavior of building materials-circuit integrity maintenance of electric cable systems" (E30, E60, E90) and the "Specimen Guideline on Conduits German designation - MLAR", and also prescribed constructional regulations!

RECOMMENDATION For safety reasons a cable of the next higher wire cross section should be selected.

Formula to calculate
the required wire cross-section of a supply line **24V**

$$A\ mm^2 = \frac{I_{A\ (total)} \cdot L_{m\ (length\ supply\ line)} \cdot 2}{2{,}0^{V}\ (voltage\ drop) \cdot 56\ m/(\Omega \cdot mm^2)}$$

Calculation example

Available data:
- cut-off current per drive (i. e. 2 x 4.0A) from data sheet
- length to be bridged from the last window to the control unit (i. e. 10 meters)

$$A = \frac{(2 \cdot 4{,}0A) \cdot 10m \cdot 2}{2{,}0V \cdot 56m/(\Omega \cdot mm^2)}$$

A = 1,42mm² -> **1,5mm²** chosen

Laying and connecting the drive cable
- Avoid extreme temperature differences in the installation area (danger of condensation).
- Set clamping point close to window and ensure accessibility.
- Ensure expansion possibilities of the drive and the drive cable.
- Consider the cable length of drives.

INSTALLATION STEP 12:
SAFETY CHECK AND TEST RUN

Check the mounted system for its safety; perform test run and commissioning.

Safety test:
- Connect operating voltage.
- Check fastening (frame brackets, casement brackets) for firm fit or tightening.

Test run:
- Visual inspection of casement movements.
- Stop immediately by malfunction!
- Pay attention to collision with facade construction and correct installation, if required.

Risk evaluation:
Before operating a power-operated window to which window drives were mounted, which were sold by the manufacturer as incomplete machines according to installation declaration, the possible risk to ahazard of persons must be determined, evaluated and minimized by taking appropriate technical measures in accordance with the Machinery Directive. Separate documents for performing a risk assessment can be downloaded from the homepage of
Firm AUMÜLLER Aumatic GmbH
(www.aumueller-gmbh.de).

Operation of the power-operated window
When operating the power-operated window safety instructions must be observed, specifically those pertaining to commissioning, operation and maintenance.

HELP IN CASE OF MALFUNCTIONS, REPAIRS AND MAINTENANCE

Professional repair of a defect drive can only be performed at the manufacturer's factory or manufacturer-certified specialist company. Unauthorized opening or manipulation of the drive terminates warranty.

1. Exchange defect drives or have them repaired by the manufacturer.
2. In case of problems during installation or normal operation the following table might be useful:

Problem	Possible causes	Possible solutions
Drive does not start	• Duration of mains power supply too short	• Adjust supply voltage as specified in the technical documentation
	• Drive run direction not correct	• Check drive cables
	• Connecting cable not connected	• Check all connection cables
	• Power supply / Control Unit voltage incorrect, too high or too low (see data sheet)	• Check power supply unit and replace if necessary
	• No mains supply to power supply unit / Control Unit (no voltage)	• Connect power supply
	• Drive has shut down on overload	• First move drive in CLOSE position
Drive doesn't start after having been in operation several times	• Operating time has been exceeded, drive has been overheated	• Wait until drive has cooled down and start again
	• See possible solutions above associated with „Drive doesn't start"	• See possible solutions associated with: "Drive doesn't start"
Drive doesn't close	• Closing edge safety mechanism has been triggered	• Release safety area for operation and reset closing edge safety mechanism
	• See possible solutions above associated with „Drive doesn't start"	• See possible solutions associated with: "Drive doesn't start"
Drive travels uncontrolled in open and close direction	• Residual ripple of power supply / control unit too hight	• Adjust drive voltage to the required value of drive. (values see data sheet of drive)
	• Fault in power supply unit / control unit	• Check output voltage of power supply unit or control unit
Drive closes, but after about 10 mm the drive open	• Close the window outside the 40 mm (Soft run mode).	• Drive mounted so, that the closing process takes place within the 40 mm (e.g. use spacer under the casement bracket).

07

MAINTENANCE AND MODIFICATION

To ensure continuous function and safety of the drive periodic maintenance by a specialist company is required at least once a year (as mandated by law for smoke and heat exhaust systems). Operational readiness must be checked regularly. Frequent inspection of the system for imbalance and signs of wear or damages of cables and fastening elements must be performed.
During maintenance contaminations must be removed from the drive. Fastenings and clamping screws must be checked for tightness. Test runs during the opening and closing procedure of the devices must be performed.
The drive itself is maintenance-free. Defect devices may only be repaired in our factory. Only replacement parts of the manufacturer may be used. When the connection cable of this device is damaged it must be replaced by the manufacturer or his customer service or a similarly qualified person to avoid endangerment.
It is recommended to conclude a maintenance contract. A sample maintenance contract can be downloaded from the homepage of

Firm Aumüller Aumatic GmbH
(www.aumueller-gmbh.de).

While cleaning the windows, drives may not have direct contact with water or cleaning agents. Drives must be protected from dirt and dust during the construction phase or renovations.

Maintenance process

1. Open or extend power-operated casement completely.
2. Completely disconnect the system from the mains and secure it against automatic or manual activation.
3. Check windows and fittings for damages.
4. Check all mechanical fastenings (if required, observe information on torques in installation instructions).
5. Check electric drives for damages and contaminations.
6. Check connecting cables (drive cable) for:
   - tightness of the cable screw
   - functionality of the strain relief
   - damages
7. Check the mobility of hinges and fittings and re-adjust or apply lubricant, e.g. silicone spray (observe the instructions of the manufacturer of this window system).
8. Check peripheral seal, remove contaminations or replace.
9. Perform cleaning to maintain functionality (e.g. clean extending elements of the drive, such as chains or spindles by damp wiping them with acid or lye-free agents and drying them and, if required, lubricate them with cleansing oil e.g., Ballistol).
10. Turn on operating voltage.
11. Open and close the power-operated window via the operating voltage (functional test).
12. If available, check and re-adjust protection systems of the safe guard fixture.
13. Check the intactness of the CE label at the power-operated system (e.g. SHEV/Natural smoke and heat exhaust ventilators).
14. Check the intactness of warning instructions and labels at the respective drive.
15. Perform a risk assessment in accordance with Machinery Directive 2006 / 42 / EG, if required, e.g. after modifying the machine.

Demounting and disposal

The drives are demounted by reversing the steps, as for the installation. The adjustments are omitted.

1. Completely disconnect the system from the power supply before demounting a drive.
2. After demounting a drive the window must be secured against independent opening.

Dispose of parts according to the locally applicable legal provisions.

Liability

We reserve the right to change or discontinue products at any time without prior notice. Illustrations are subject to change. Although we take every care to ensure accuracy, we cannot accept liability for the content of this document.

Warranty and Customer service

In principal apply our:

„General Terms for the Supply of Products and Services of the Electrical Industry (ZVEI)".

The warranty corresponds with legal provisions and applies to the country in which the product has been acquired.
The warranty includes material and manufacturing defects incurred during normal use.

The warranty period for delivered material is twelve months.

Warranty and liability claims for personal injuries or material damages are excluded, if caused by one or more of the following:

- Improper use of the product.
- Improper installation, commissioning, operation, maintenance or repair of the product.
- Operating the product by defect and improper installed or not functioning safety and protection devices.
- Ignoring instructions and installation requirements in these instructions.
- Unauthorized constructional modifications at the product or accessories.
- Disaster situations due to effects of foreign bodies and Acts of God.
- Wear and tear.

Point of contact for possible warranty claims or for repair parts or accessories is the responsible branch office or the responsible person at

Firm Aumüller Aumatic GmbH.

Contact data are available at our homepage

(www.aumueller-gmbh.de)

Zertifikat Certificate

VdS Schadenverhütung
bescheinigt die Anwendung eines

VdS

Qualitätsmanagementsystems

für

aumüller

Aumüller Aumatic GmbH · Gemeindewald 11 · D-86672 Thierhaupten

Zertifikats-Nr.:	Anzahl der Seiten:	Gültig von:	Gültig bis:
S 814040	1	10.10.2014	09.10.2017

Geltungsbereich des Zertifikates:

Entwicklung, Herstellung und Vertrieb von Produkten und Systemen für Rauch- und Wärmeabzug, natürliche Gebäudelüftung, automatische Tür- und Toranlagen sowie damit verbundene Wartungs-, Dienst- und Serviceleistungen

Zertifizierungsgrundlagen:

DIN EN ISO 9001
Qualitätsmanagementsysteme
Anforderungen
Ausgabe Dezember 2008
Qualitätsmanagementhandbuch des Zertifikatsinhabers

Köln, den 10.10.2014

Reinermann
Geschäftsführer

ppa. Urban
Leiter der Zertifizierungsstelle

DAkkS
Deutsche Akkreditierungsstelle
D-ZM-11149-01-01

Das Zertifikat umfasst ausschließlich das Qualitätsmanagementsystem in dem angegebenen Geltungsbereich. Die gegenwärtige Gültigkeit kann unter www.vds.de verifiziert werden.

Das Zertifikat gibt keine Auskunft über die Zertifizierung von Qualitätsmanagementsystemen oder die VdS-Anerkennungen von Errichterfirmen, Wach- und Sicherheitsunternehmen, Produkten, Verfahren, u. ä. Hierfür sind gesonderte Nachweise erforderlich.

Das Zertifikat darf nur unverändert und mit sämtlichen Anlagen vervielfältigt werden. Während der Gültigkeit des Zertifikates muss das Qualitätsmanagementsystem der Organisation stets die Forderungen der Zertifizierungsgrundlagen erfüllen. Dies wird durch VdS Schadenverhütung regelmäßig begutachtet.

Jegliche Werbung mit dem Zertifikat muss den Inhalt korrekt wiedergeben und darf nicht auf wettbewerbsrechtswidrige Art und Weise erfolgen.

VdS Schadenverhütung GmbH
Zertifizierungsstelle
Amsterdamer Str. 174
D-50735 Köln

Ein Unternehmen des Gesamtverbandes der Deutschen Versicherungswirtschaft e. V. (GDV)

Akkreditiert als Zertifizierungsstelle für Qualitätsmanagementsysteme von der DAkkS - Deutsche Akkreditierungsstelle GmbH

08

KONFORMITÄTSERKLÄRUNG
DECLARATION OF CONFORMITY

Hersteller
Manufacturer

aumüller

Aumüller Aumatic GmbH
Gemeindewald 11
88672 Thierhaupten
Germany

Produktart | *Product type:* **Kettenantriebe für Fenster** | *Chain drives for windows*
Produktbaureihe | *Product series:* **KSA xxxx S12 - 24V / 24V Z**
KSA xxxx S12 - 230V / 230V Z

Ab Seriennummer | *From serial number:* **XXXXXX-XX-XXX**
Ab Datum | *From date:* (Year-W-Week) **16W10**

Wir bestätigen die Konformität des oben bezeichneten Produktes mit folgend gelisteten EU-Richtlinien sowie Normen:
We herewith confirm the conformity of the above mentioned product with EC Directives and the standards listed below:

KONFORMITÄT
CONFORMITY

Richtlinie über elektromagnetische Verträglichkeit 2014/30/EU
Directive relating to Electro-Magnetic Compatibility 2014/30/EU
Niederspannungsrichtlinie 2014/35/EU
Low Voltage Directive 2014/35/EU

HARMONISIERTE NORMEN
HARMONIZED STANDARDS

DIN EN 60335-2-102:2016-05
DIN EN 61000-6-1:2007-10
DIN EN 61000-6-2:2006-03
DIN EN 61000-6-3:2011-09
DIN EN 61000-6-4:2011-09

SONSTIGE TECHNISCHE NORMEN UND SPEZIFIKATIONEN
FURTHER TECHNICAL STANDARDS AND SPECIFICATIONS

DIN EN 12101-2:2003-09 (in ferralux® NRWG - 24 V DC)
Montageanweisung | *Installation instructions*

Thierhaupten, 01.03.2016

R. Meinzer

Geschäftsführer / Verantwortlich für die technische Dokumentation
Managing Director / Head of technical documentation

CE

Die Sicherheitshinweise der mitgelieferten Produktdokumentation sind zu beachten!
The safety instructions of the supplied product documentation are to be observed!

TRANSLATION OF THE ORIGINAL INSTRUCTIONS (GERMAN)

Once the assembly and commissioning has been completed, the installer of a machine „power-operated window and door" shall hand these instructions over to the end-user. The end-user shall store these instructions in a safe place for further reference and use, if required.

Important note:
We are aware of our responsibility, which is why we present life-supporting and value-preserving products with greatest possible conscientiousness. Although we make every effort to ensure that the data and information are as correct and up-to-date as possible, we still cannot guarantee that they are free from mistakes and errors.
All information and data contained in this document are subject to alterations without prior notice. Distribution and reproduction of this document as well as the use and disclosure of its content is not authorized unless expressly approved. Offenders will be held liable for the payment of damages. All rights reserved in the case of a patent award or utility model registration.
Basically the General Terms and Conditions of Aumüller Automatic GmbH apply to all offers, supplies and services.

The publication of these assembly and commissioning instructions supersedes all previous editions.

08

Anbefalede inspektioner

Reference røgklap	
Dato for inspektion	
Kontrol af kabling for aktuator for skader	
Kontrol af kabling for endekontakt for skader	
Kontrol af renholdelse af røgklap og evt. rengøring	
Kontrol af tilstand på fløj og pakninger, evt. udbedring og oprettelse af rapport.	
Bekræftelse af at røgklap åbner (indenfor 60 s) og lukker (indenfor 60 s) ved brug af styring. Observering af proces og evt. tilpasning med oprettelse af respektive rapport	
Bekræftelse af positioner ÅBEN og LUKKET på endekontakter og evt. udbedring med oprettelse af respektive rapport.	
Bekræftelse af at røgklap opfylder sin funktion som en komponent i røgudledningsanlægget.	
Bekræftelse af at røgklap er efterladt i driftsklar stilling.	

Bemærkninger: **En røgklap er generelt en del af et røgudledningsanlæg.**

Der skal derfor ske en kontrol af det samlede anlæg, som angivet i drifts- og vedligeholdelseskrav for anlægget.